433 MHz ASK Receiver

FEATURES

- Super heterodyne ASK receiver
- high integration rate with low external components
- LNA & Mixer
- Integrated LP filter and data slicer
- Integrated bandgap reference voltage source
- Integrated PLL
- Low power consumption of typical 2.5 mA (power down mode: < 0.1 µA)
- 0.6 µm BiCMOS process
- TSSOP24 (173mil, 1.1 mm high) RoHs conform

BLOCK DIAGRAM

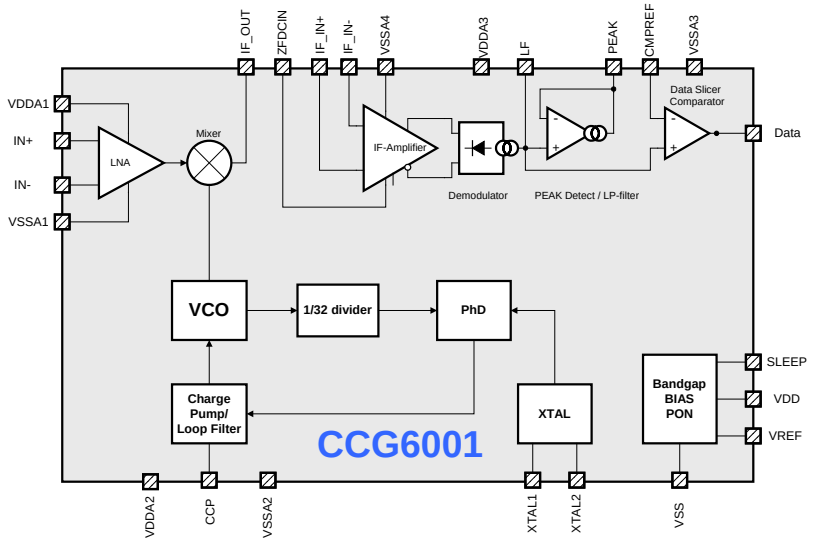

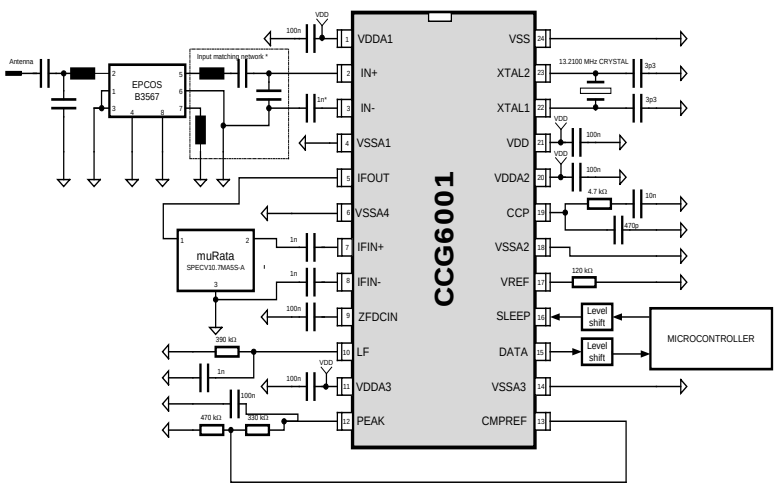

Parameter	Symbol	Conditions	Min.	Max.	Unit
Supply voltage	V_{DD}- V_{SS}		-0.70	6.5	V
Total power dissipation	P_{TOT}	@ ϑ_{op} = 85 °C		600*[1]	mW
Operation temperature range	ϑ_{op}		-20	85	°C
Storage temperature range	$\vartheta_{storage}$		-55	150	°C
Soldering Profile	$t_{soldering}$	ϑ_{sol_max} = 260 °C		12	s
ESD Protection	V_{ESD}	Human Body model JEDEC JESD22 Method A114B Class2	2		kV
Permanent current into ESD-protection diodes	I_{DC_ESD}	Only in case of forward biased ESD diodes. Input voltage above VCC or below VSS !		2	mA
Reliability	MTBF	(VDD –VSS) < 5.5 V	10^5		h

Disclaimers:
Creative Chips GmbH reserves the right to make changes without further notice to any products herein to improve reliability, function or design. Creative Chips does not assume any liability arising out of the application or use of any product or circuit described herein; neither does it convey any license under its patent rights, nor the rights of others. These products are not authorized for use as critical components in life support devices or systems without the express written approval of Creative Chips.

CREATIVE CHIPS GmbH, Am Ockenheimer Graben 54, D-55411 Bingen/Rhein, GERMANY
www.creativechips.com